**HOT METAL DETECTOR for installation Below Roll Table**

# IRIS

# 111-09

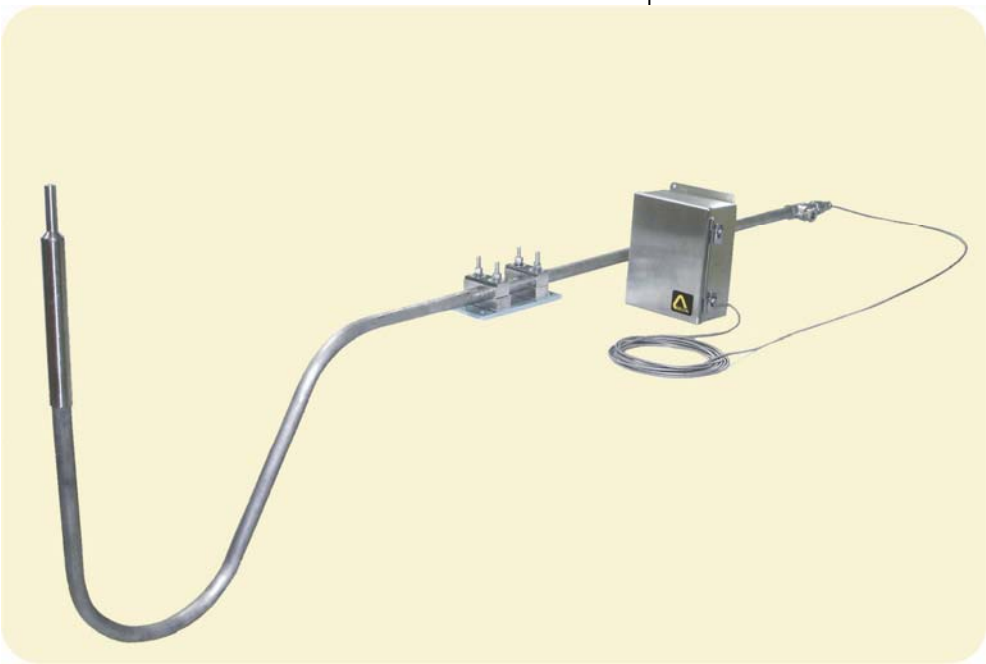

**Fiber Optic Hot Metal Detector**

**Mounts Below Roll Table**

**High Accuracy**

Lt 4180

**DELTA USA, Inc** - Tel : (412) 429 3574 - Fax : (412) 429 3348 - info@delta-usa.com - **www.delta-usa.com**

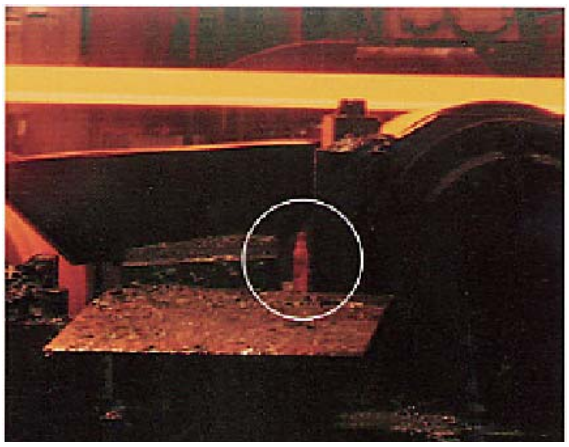

The IRIS' armored stainless steel nozzle below pass line in a hot rolling mill,

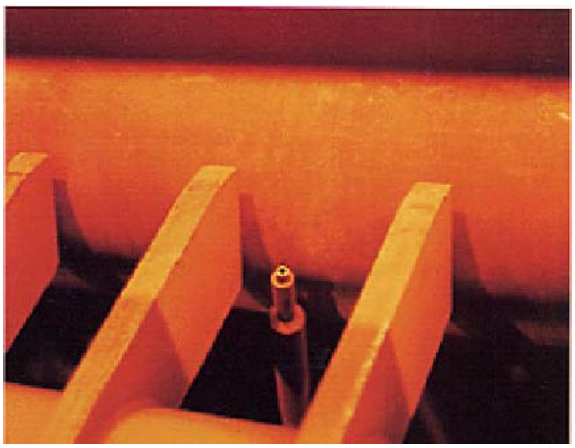

The IRIS peers between apron plate leaves in the rolling mill

## Applications

The IRIS Hot Metal Detector is used for the most difficult detections applications in hot strip and plate mills with descale water, lot of steam or mechanical obstruction such as:

- Detection before crop shear,
- At the edgers for precise timing of automatic width control.

## IRIS 111-09 – General Description

The IRIS (InfraRed Intelligent Sensor) is a precision hot metal detector specifically designed to meet the most challenging requirements in hot rolling mills.

Combining fiber optic technology with state-of-the-art electronics, the IRIS is the finest hot metal detector available today.

The IRIS is comprised of three major elements: a fiber optic system which detects light from the material, a stainless steel mechanical system which positions and protects the optical system in the line and an electronic Sensor Control Unit which reacts to the presence or absence of light in the optical system.

## IRIS Optical System

The optical front end of the IRIS consists of a small diameter lens securely mounted to a locating spider. The efficient design of these components allows this assembly to fit inside a one inch diameter pipe, enabling the sensor to be positioned in tight spaces beneath the roll line.

The lens focuses infra-red light onto a fiber optic bundle which transmits the light energy to the electronics enclosure.

## IRIS Electronics

The photo-detector is the latest in a new generation of diodes, incorporating great sensitivity and speed of response. The photo-detector senses the presence or absence of light in the fiber optic bundle in just a few microseconds.

The IRIS is easily configured to suit the customer's unique applications. DIP switches are provided to adjust the gain of the sensor and the switching threshold.

IRIS outputs are switched 'ON' or 'OFF' signaling the presence or absence of light, respectively. The turn-off time has a DIP switch configurable delay, permitting the sensor to ignore cold spots, or patches of scale, etc.



**DELTA USA, Inc** - Tel : (412) 429 3574 - Fax : (412) 429 3348 - info@delta-usa.com - **www.delta-usa.com**

## IRIS Mechanical System

Only the IRIS from DELTA comes complete with all the necessary hardware to mount and protect the unit in a rolling mill. All the basic mechanical components are made of stainless steel. The main mechanical component is a one inch stainless steel pipe, bent and cut to required dimensions.

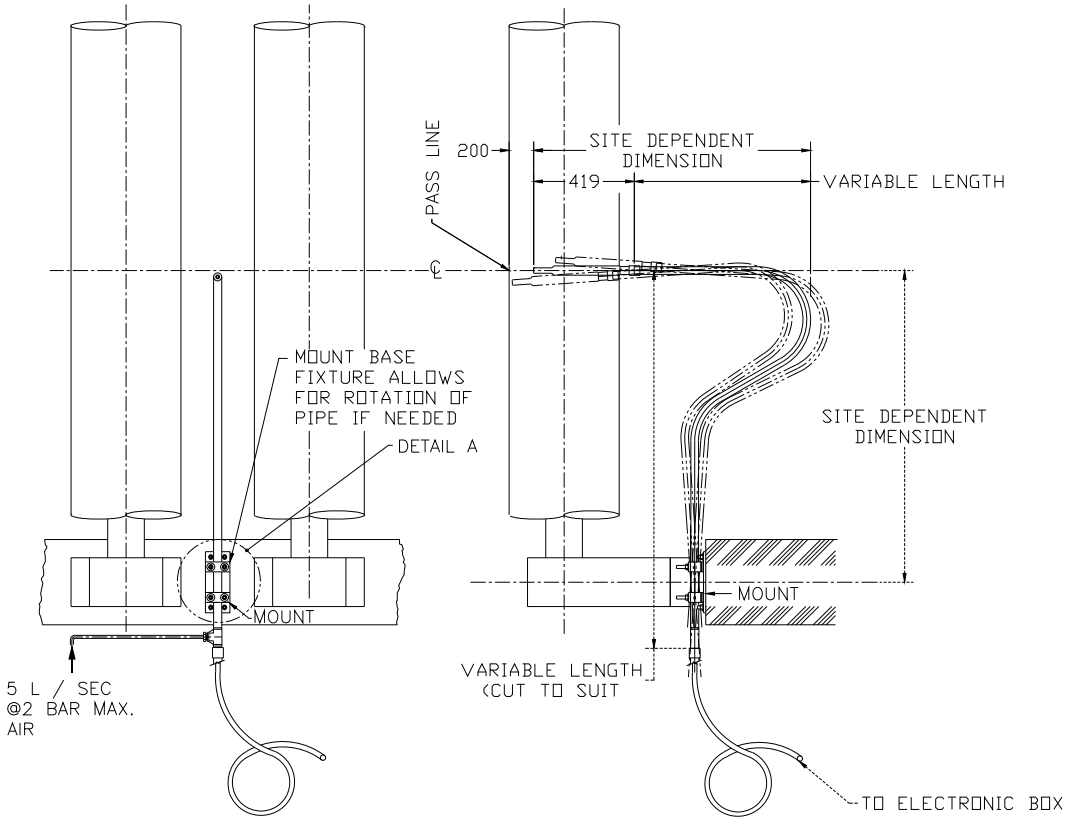


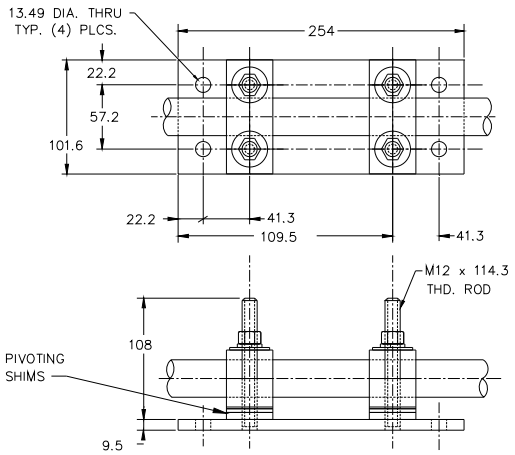


Detail A – Mounting block

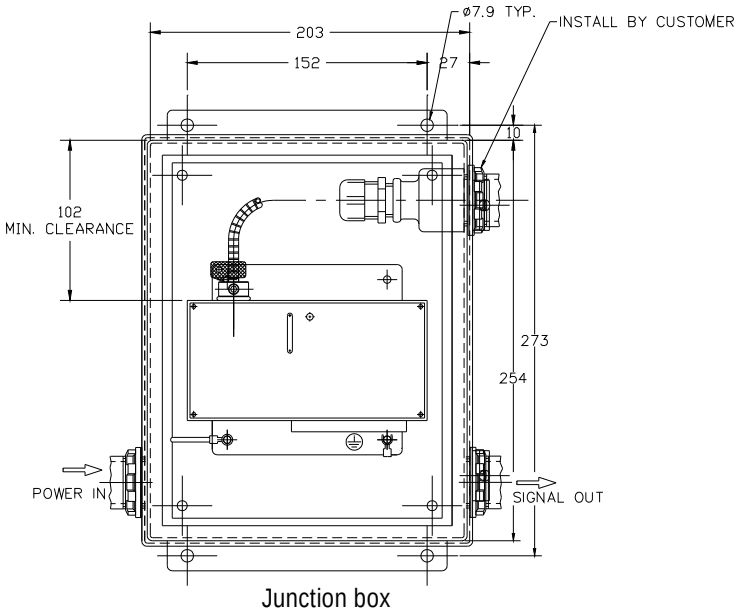


Junction box

The stainless pipe is held in place by a mounting block, which is typically attached to the roll table support structure.

The mounting block is designed to allow both lateral and angular adjustment of the pipe, permitting accurate positioning of the nozzle just below pass line.



**DELTA USA, Inc** - Tel : (412) 429 3574 - Fax : (412) 429 3348 - info@delta-usa.com - **www.delta-usa.com**

In a typical installation the lens housing is set about 200 mm (8") below pass line and aimed so that the optical axis intersects pass line at the centreline of the roll table. The lens assembly is affixed to one end of the stainless steel support pipe, and covered with armoured stainless steel housing.

A 'T' fitting is attached to the other end of the support pipe. Clean, dry service air (or nitrogen) is supplied to the 'T' fitting. Flow through the pipe and around the lens assembly is sufficient to keep the temperature of the lens assembly and the fibre optic bundle within specified limits.

The exit velocity of the air prevents scale, water and the like from entering the lens housing and fouling the lens. The exit air flow also serves to keep the optical path from the housing to the material clear.

The fibre optic bundle is attached to the lens assembly and passed through the support pipe and the 'T' to the electronics enclosure. In some applications, the electronics enclosure is actually attached to the end of the support pipe; in standard applications it may be located up to thirty cable feet (30') away from the optical front end.

Standard lengths available are 9 m (30'), 12 m (40') and 15 m (50').

## Technical Specifications

| *Model* | *IRIS111-30-09* | *IRIS111-40-09* | *IRIS111-50-09* |
|---|---|---|---|
| Fiber length | 9 m (30') | 12 m (40') | 15 m (50') |
| Detectable Temperature Range (steel) | 550 °C (1025 °F) | | |
| Distance from nozzle to target | 100-250 mm (4" to 10") – typically 200 mm (8") | | |
| Spot Size at target distance | 6.35 mm (0.25" typically) | | |
| Spectral response | +0dB -3dB from 1.0 to 1.7 micron | | |
| Response time | < 50 µsec, on or off | | |
| Outputs | Five open collectors (200mA @ 48VDC max): (3) delay output and (2) direct output<br>One Form `C' contact (NO/NC) (250mA @ 110VDC or 125VAC max)<br>One 0-10VDC single ended analogue, Min load resistance 10K Ohms, Max load capacitance 2.5nF | | |
| De-bounce delay | Selectable from 2 msec to 4 sec | | |
| Electrical Power | 115VAC or 230VAC, 50/60Hz, 12VA | | |
| Air purging | About 5 l/sec @ 2 bar max (27 scfm @ 25 psi max)<br>Instrument air (clean, dry, no oil) or purge nitrogen | | |
| Operating temperature | 0 °C to 55 °C (32 °F to 131 °F) | | |

## Reference for order

**IRIS111-..-09**

*Fiber Optic Length:*
30 : 9 m (30')
40 : 12 m (40')
50 : 15 m (50')

*Supply voltage:*
115 VAC
230 VAC

E.g. : IRIS111-30-09 115VAC

**DELTA**
Tel. +33 388 78 21 01 - Fax : +33 388 76 02 29
info@deltasensor.eu - www.deltasensor.eu

**DELTA Sensor (China)**
Tel: +86 519-85068855 – Fax: +86 519-85068865 - info@deltasensor.com.cn

**DELTA Vertriebsgesellschaft mbH (Germany)**
Tel: +49 700 3358 2736 - Fax: +49 700 3358 2835 - info.de@deltasensor.eu

**DELTA Sensor (India)**
Tel: +91 11 4054 8170 - Fax: +91 11 4054 8172 - info@deltasensor.co.in

**DELTA USA, Inc. (North America)**
Tel: +1 (412) 429 3574 - Fax: +1 (412) 429 3348 - info@delta-usa.com

**DELTA Sensor (Russia)**
Tel: + 7 495 792 3037 - Fax: +7 495 792 3039 – info.ru@deltasensor.eu

DELTA USA INC. (North America)
CARNEGIE OFFICE PARC - BUILDING 2, SUITE 180
600 NORTH BELL AVENUE, CARNEGIE, PA 15160

Tel: (412) 429 3574 Fax: (412) 429 3348
info@delta-usa.com www.delta-usa.com

09/11 – Printed in USA - © DELTA SAS 2011